CONCRETE PLANTERS

SCALE 1:40

SECTION C-C

SCALE 1:40

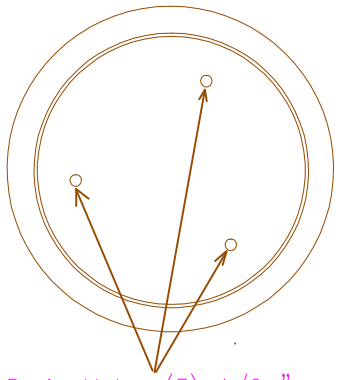

Drain Holes (3) 1/2 "

SECTION B-B

SCALE 1:40

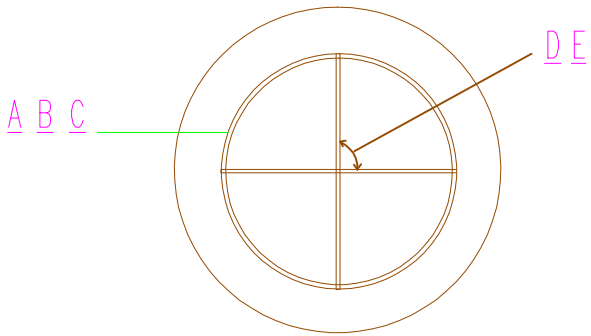

Reinforcement steel
circular with cross ties

SECTION A-A
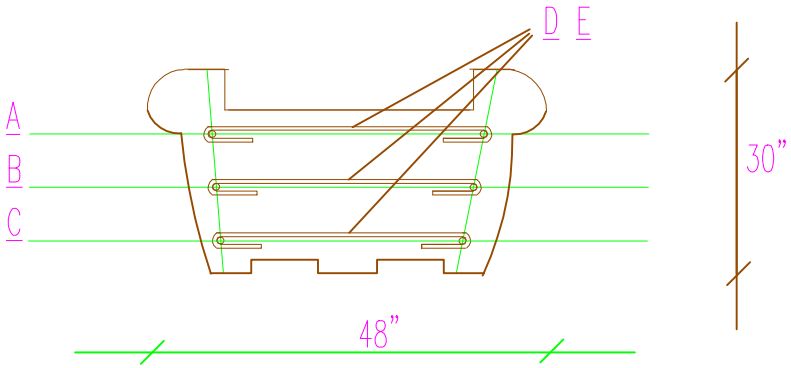
SCALE 1:40